CALIBRE Metalwork

www.calibremetalwork.co.uk

Hazel Knoll Farm. Torkington Road, Hazel Grove, Stockport. SK7 6NW
Tel: +44 (0) 161 427 4603

Product: Fabricated Column

Column Material: Aluminium / Galvanised Mild Steel

Collar Material: Cast Aluminium / Cast Iron

Finish: Primed And Painted

Notes: Fully Welded Construction using 5mm fillet welds unless specified otherwise

VIEW 'C'
(10 thk HEADPLATE)

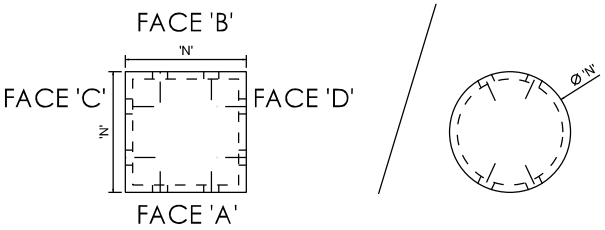

SECTION 'A-A'

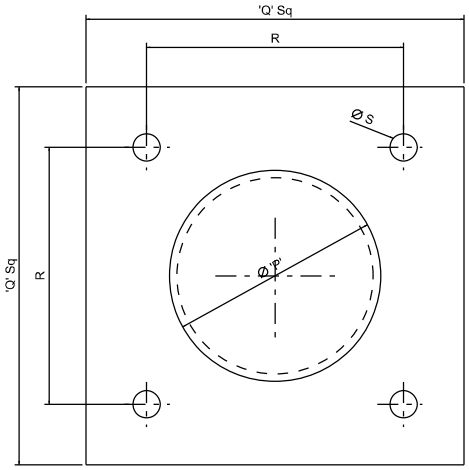

SECTION 'B-B'

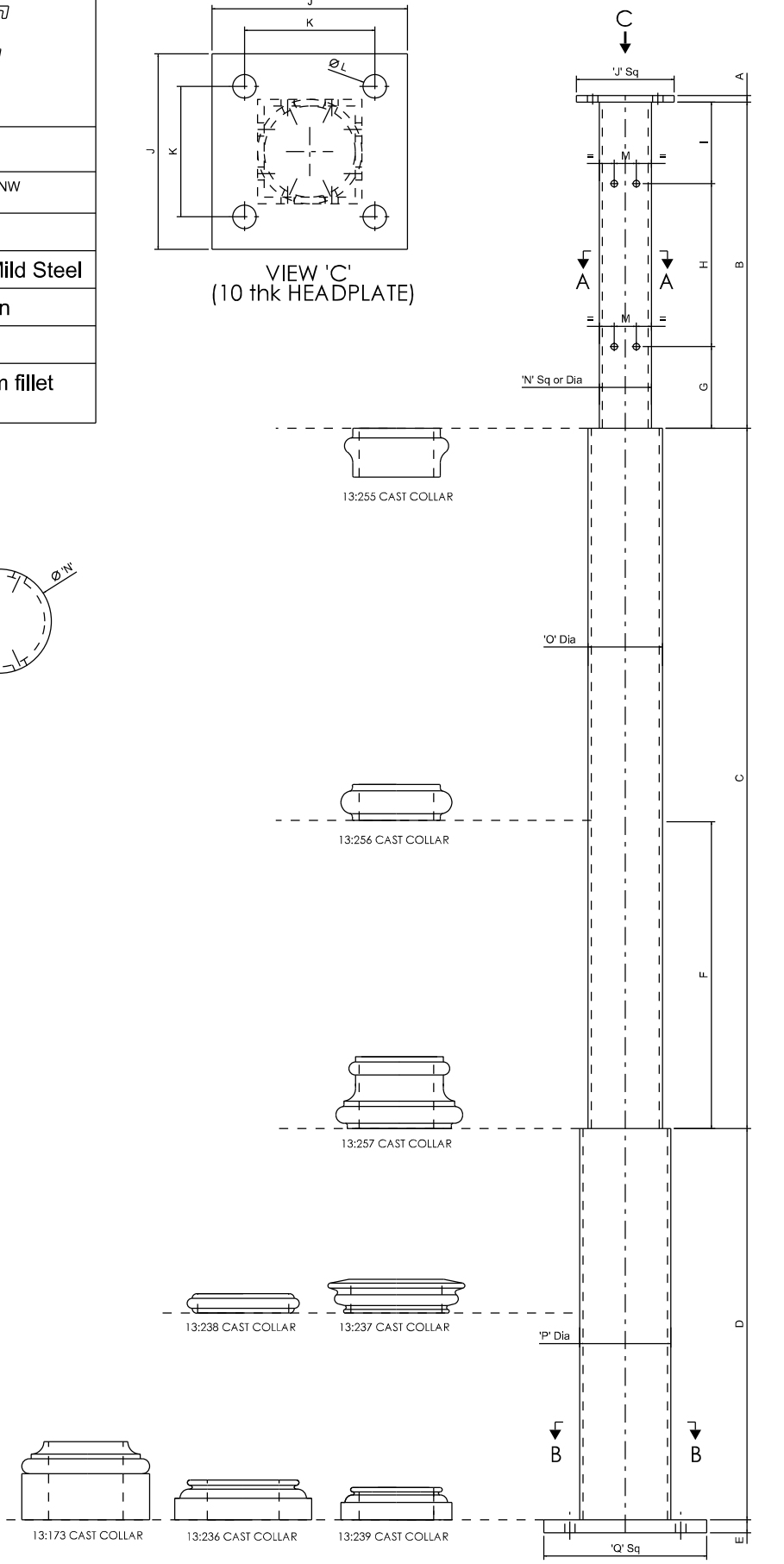

ELEVATION OF FABRICATED COLUMN

Ref No	Qty	DIM 'A'	DIM 'B'	DIM 'C'	DIM 'D'	DIM 'E'	DIM 'F'	DIM 'G'	DIM 'H'	DIM 'I'	DIM 'J'	DIM 'K'	DIM 'L'	DIM 'M'	FACES TO BE DRILLED	DIM 'N'	DIM 'O'	DIM 'P'	DIM 'Q'	DIM 'R'	DIM 'S'
C1																					
C2																					
C3																					
C4																					
C5																					
C6																					
C7																					
C8																					